Wine Cabinet

Model Number: 5277296PCOM

Finish: Black/Sonoma Oak

OVERALL PRODUCT SIZE(in inches)

Cabinet: 36" (W)* 18.2" (D)* 37.1" (H)

Unit Net weight: 103.2lbs (46.9kg)

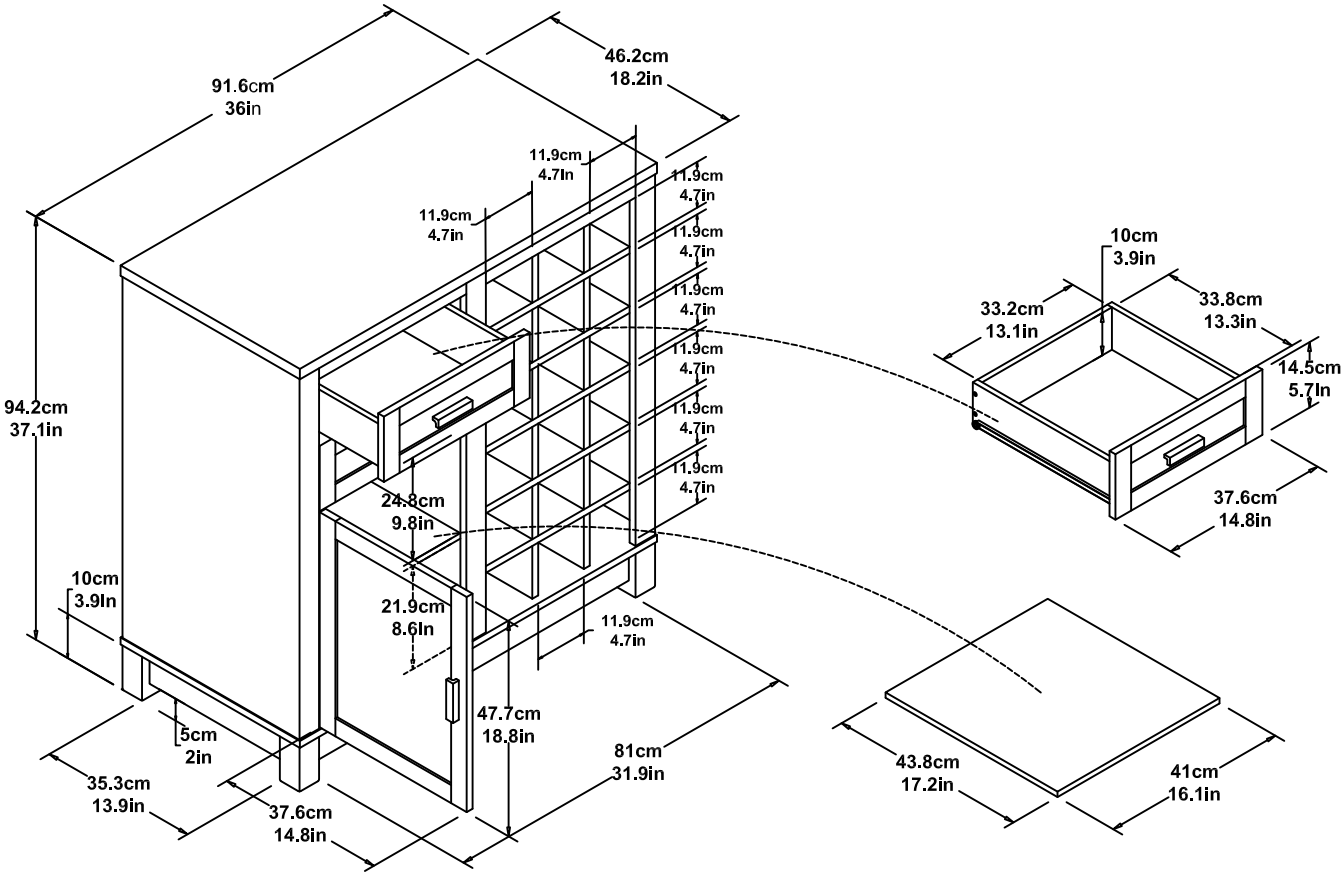
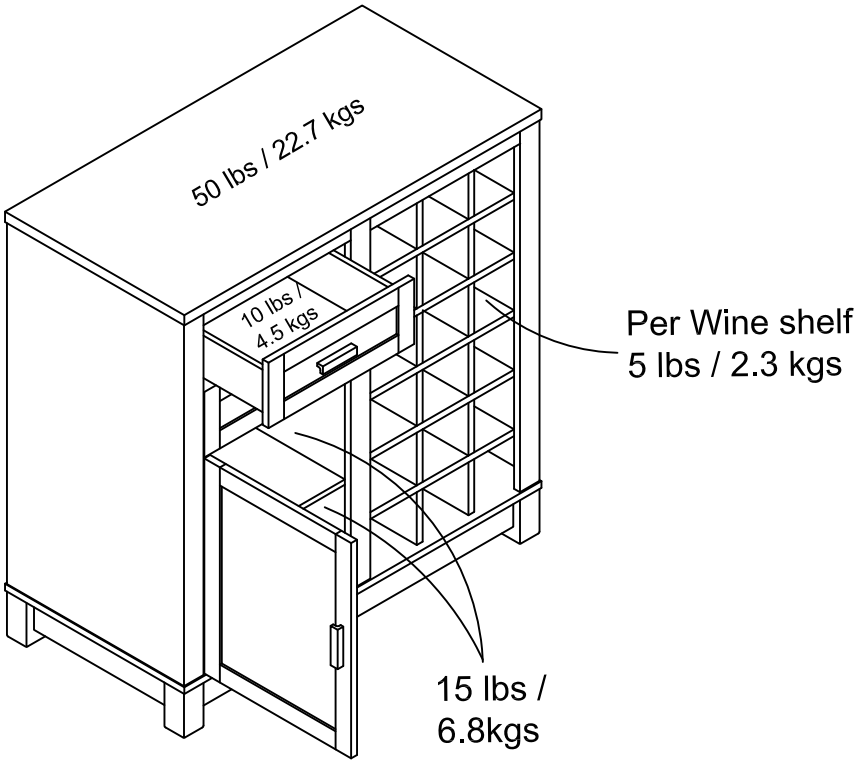
MAXIMUM WEIGHT CAPACITIES